LITERATURE CITED

1. Bieber, Herman, F. E. Steidler, and W. A. Selke, *Chem. Eng. Progr. Symposium Ser. No. 14,* **50**, p. 17-21 (1954).
2. Boyd, G. E., and B. A. Soldano, *J. Am. Chem. Soc.*, **75**, 6091-6099 (1953).
3. *Ibid.*, pp. 6107-6110 (1953).
4. Crank, J., "The Mathematics of Diffusion," Oxford University Press, London (1957).
5. "Dowex: Ion Exchange," the Dow Chemical Company, Midland, Michigan (1958).
6. Hamer, W. J., ed., "The Structure of Electrolytic Solutions," Wiley, New York (1959).
7. Helfferich, Friedrich, *J. Phys. Chem.*, **66**, 39-43 (1962).
8. ———, "Ion Exchange," p. 255, McGraw-Hill, New York (1962).
9. Helfferich, Friedrich, and M. S. Plesset, *J. Chem. Phys.*, **28**, 418-424 (1958).
10. ———, and J. N. Franklin, *ibid.*, **29**, 1064-1069 (1958).
11. Hering, Burton, D. Eng. dissertation, Yale University, New Haven, Connecticut (1961).
12. "International Critical Tables," Vol. 5, pp. 65-67, McGraw-Hill, New York (1929).
13. Kolthoff, I. M., and E. B. Sandell, "Textbook of Qualitative Inorganic Analysis," pp. 549-551, Macmillan, New York (1952).
14. Pierce, W. C., and E. L. Haenisch, "Qualitative Analysis." Wiley, New York (1953).
15. Reichenberg, D., *J. Am. Chem. Soc.*, **75**, 589-597 (1953).
16. Smith, G. F., "Cerate Oxidimetry," The G. Frederick Smith Chemical Co., Columbus, Ohio (1942).
17. Snell, F. D., and C. T. Snell, "Colorimetric Methods of Analysis," Chap. 5, 17, Van Nostrand, New York (1949).

Manuscript received October 12, 1962; revision received January 23, 1963; paper accepted January 23, 1963.

An Analysis of Slug Flow Heat Transfer in an Eccentric Annulus

WILLIAM T. SNYDER

Brookhaven National Laboratory, Upton, New York

A solution is presented for the temperature distribution in a fluid flowing in an eccentric annulus formed with circular cylinders under the assumption of slug flow. The flow is assumed to be fully developed thermally with constant thermophysical properties. The outer surface is assumed to be adiabatic and the inner surface temperature is assumed to be independent of circumferential position. General expressions and numerical results for a typical set of conditions are presented for the quantities, local heat flux, local heat transfer coefficient, adiabatic surface temperature distribution, and average Nusselt number. The application of the present results to the prediction of turbulent heat transfer to liquid metals is indicated, and a comparison with other liquid metal heat transfer analyses is presented.

One of the critical problems encountered in the longitudinal flow in close-packed tubular heat exchangers is that of tube misalignment. For example, Friedland, Dwyer, Maresca, and Bonilla (*1*) observed variations by a factor of 2 to 4 of the average Nusselt number between different tubes in such an array. These investigators attributed this variation principally to the effect of tube misalignment in an initially geometrically symmetrical array.

An exact solution for the laminar flow velocity and temperature distributions between cylinders arranged in symmetrical triangular or square arrays has been presented by Sparrow and Loeffler (*2*, *3*). Deissler and Taylor (*4*) have analyzed the turbulent flow case using an approximate graphical technique. Dwyer and Tu (*5*) have presented an approximate analysis for turbulent flow heat transfer through bundles in which the model of an annulus was assumed. In this model, the hexagonal section associated with each tube is replaced by an imaginary annulus surrounding the tube such that the cross-sectional area of the annulus equals the hexagonal cross-sectional area associated with each tube. Sparrow and Loeffler (*3*) showed that for laminar flow, the approximate annulus model predicts the average Nusselt number with an error of less than 5% from the exact value for tube-spacing ratios (ratio of tube center distance to tube diameter) as low as 1.5. The error becomes even less at higher spacing ratios, and for turbulent flow, the error would be less than that for laminar flow at the same spacing ratio.

This background for the symmetric case suggests the use of an eccentric annulus as a model representative of the flow around a misaligned tube in an otherwise symmetric array. The purpose of the present investigation is to analyze the temperature distribution in an eccentric annulus assuming slug flow. Hartnett and Irvine (*6*) have shown that the slug flow Nusselt number is useful in estimating the total Nusselt number for liquid metals flowing in noncircular passages.

In the analysis, a thermally fully developed flow will be assumed with constant heat rate per unit length of the inner surface. The outer surface will be assumed to be adiabatic. The temperature on the inner surface will be assumed to be independent of circumferential position. As pointed out by Hartnett and Irvine (*6*), these boundary conditions represent one of three classes of boundary conditions of technical interest in noncircular duct heat transfer.

William T. Snyder is with the State University of New York, Stony Brook, New York.

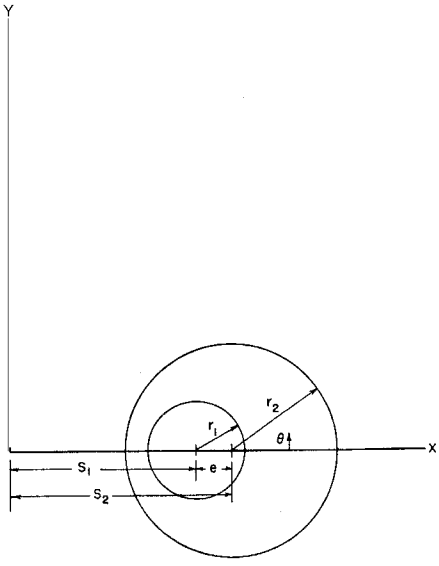

Fig. 1. Eccentric annulus geometry.

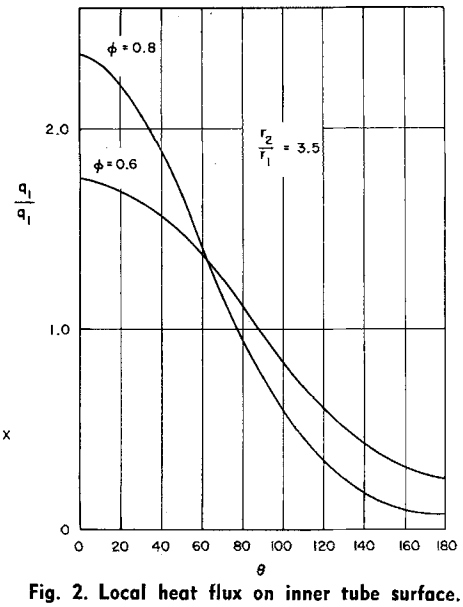

Fig. 2. Local heat flux on inner tube surface.

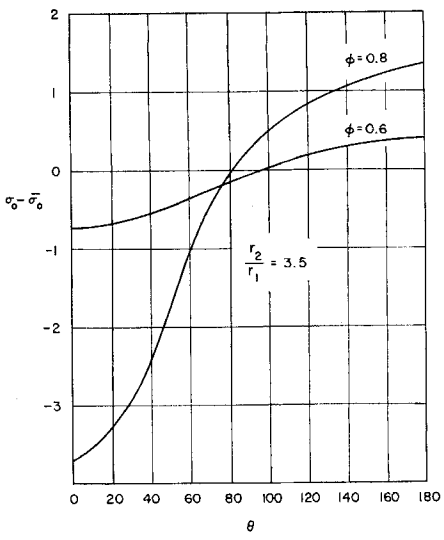

Fig. 3. Outer tube surface temperature distribution.

THE ANALYSIS

The geometry considered in the present analysis is shown in Figure 1. The governing equation for the temperature distribution is

$$\rho\, C_p\, U \frac{\partial T}{\partial z} = k\left(\frac{\partial^2 T}{\partial x^2} + \frac{\partial^2 T}{\partial y^2}\right) \tag{1}$$

For a thermally fully developed flow, the temperature gradient $\frac{\partial T}{\partial z}$ must be a constant (7). This condition plus the assumption of constant thermophysical properties and slug flow mean that the left-hand side of Equation (1) is constant.

The boundary conditions assumed are that $T = T_1$ along r_1 and $\frac{\partial T}{\partial n} = 0$ along r_2. The condition along r_1 assumes that at any Z location, the inner surface temperature is independent of peripheral position. The inner surface temperature T_1 will vary linearly with Z because of the assumption of constant heat rate per unit length of the inner surface. There will be a peripheral variation of local heat flux on the inner surface. The boundary condition along r_2 expresses the fact that the outer surface is assumed to be adiabatic. Other possible boundary conditions are discussed in reference 6.

Because of the asymmetry of the geometry, cylindrical coordinates cannot be used, and bipolar coordinates (8) are appropriate. Jeffrey (9) has shown the utility of bipolar coordinates in treating two dimensional problems involving two circles of arbitrary radii and center distance. The problem is then to transfer Equation (1) and the boundary conditions to bipolar coordinates and obtain a solution in this coordinate system. El-Saden (10) has recently considered the problem of heat conduction with internal sources in an eccentrically hollow cylinder. The geometry and governing differential equation for this problem are identical to the present problem; however, the boundary conditions are different for the two cases. Consequently, the general solution obtained by El-Saden is applicable to the present problem, and the constants appearing in the general solution may be determined from the boundary conditions of the present problem. The algebraic details are laborious and tedious, and only the final result will be presented here. Many of the algebraic details are contained in reference 10. The solution for the dimensionless temperature distribution may be written

$$\sigma = F + E\eta + \frac{1}{2}\frac{\cosh\eta}{\cosh\eta - \cos\xi} + \sum_{n=1}^{\infty}\left(A_n e^{n\eta} + B_n e^{-n\eta}\right)\cos n\xi \tag{2}$$

where

$$\sigma = \frac{(T - T_1)}{\dfrac{c^2\,\rho\, c_p\, U}{k}\dfrac{\partial T}{\partial z}} \tag{2a}$$

$$E = \frac{1}{2}\operatorname{csch}^2\beta \tag{2b}$$

$$F = -\frac{1}{2}\left(\coth\alpha - \alpha\operatorname{csch}^2\beta\right) \tag{2c}$$

$$A_n = \frac{\operatorname{ctnh}\beta - \operatorname{ctnh}\alpha + \dfrac{1}{n}\operatorname{csch}^2\beta}{e^{2n\alpha} + e^{2n\beta}} \tag{2d}$$

$$B_n = -\frac{e^{2n\beta}\operatorname{ctnh}\alpha + e^{2n\alpha}\left(\operatorname{ctnh}\beta + \dfrac{1}{n}\operatorname{csch}^2\beta\right)}{e^{2n\alpha} + e^{2n\beta}} \tag{2e}$$

$$e^{2\eta} = \frac{y^2 + (x + c)^2}{y^2 + (x - c)^2} \tag{2f}$$

$$\tan\xi = \frac{2yc}{x^2 + y^2 - c^2} \tag{2g}$$

$$c = r_1\sinh\alpha = r_2\sinh\beta \tag{2h}$$

$$\cosh\alpha = \frac{1}{\gamma}\,\frac{\gamma\,(1 + \phi^2) + (1 - \phi^2)}{2\phi} \tag{2i}$$

$$\cosh\beta = \frac{\gamma\,(1 - \phi^2) + (1 + \phi^2)}{2\phi} \tag{2j}$$

$$\gamma = \frac{r_1}{r_2} \tag{2k}$$

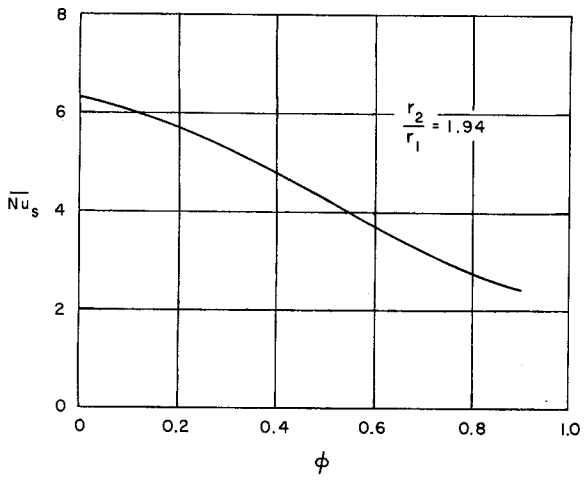

Fig. 4. Average slug Nusselt number.

$$\phi = \frac{e}{r_2 - r_1} \tag{2l}$$

The heat transfer parameters of interest can now be determined from the temperature distribution of Equation (2).

INNER SURFACE HEAT FLUX DISTRIBUTION

The local heat flux at the inner surface can be evaluated from the Fourier equation

$$q_1 = -k \left.\frac{\partial T}{\partial n}\right)_{r1} \tag{3}$$

where n is the direction normal to the inner surface. With the relations between physical and bipolar coordinates expressed by Equations (2f) and (2g), it can be shown that

$$\left.\frac{\partial T}{\partial n}\right)_{r1} = \frac{1 - \cosh\alpha \cos\xi}{\cos\theta_1} \left.\frac{\partial T}{\partial \eta}\right)_{\alpha} \tag{4}$$

where θ_1 is the angular position measured by a radius vector with center at S_1 and the relationship between ξ and θ_1 along r_1 is

$$\tan\theta_1)_{r1} = \frac{\sinh\alpha \sin\xi}{\cosh\alpha\cos\xi - 1} \tag{4a}$$

With Equations (3), (4), and (4a), the local heat flux at the inner surface was calculated. The results are shown in Figure 2 for two eccentricity values of 0.6 and 0.8 and for a radius ratio of $\frac{r_2}{r_1} = 3.5$. The ordinate of Figure 2 is the ratio of local to average heat flux around the inner surface. It is seen that the heat transfer is highest in the region of maximum separation of the surfaces and decreases monotonically to a minimum on the side of minimum separation.

ADIABATIC SURFACE TEMPERATURE DISTRIBUTION

The temperature distribution around the outer surface can be obtained from Equation (2) by the substitution $\eta = \beta$ where β is a constant determined by Equation (2j). The temperature distribution is shown in Figure 3 for eccentricity values of 0.6 and 0.8 and for $\frac{r_2}{r_1} = 3.5$. The maximum temperature occurs on the side of minimum separation, 180 deg. from the position of maximum heat flux. It is clear that large temperature variations can occur along the adiabatic surface for high eccentricities.

AVERAGE NUSSELT NUMBER

An expression for the average Nusselt number can be obtained by starting with the definition of σ:

$$\sigma = \frac{T - T_1}{\dfrac{c^2 \rho C_p U}{k} \dfrac{\partial T}{\partial z}} \tag{5}$$

When the total heat flux per unit length is written as

$$Q = 2\pi r_1 \overline{h} (T_1 - T_b) = \rho U A C_p \frac{\partial T}{\partial z} \tag{6}$$

and Equations (5) and (6) are combined, we get

$$\sigma = \frac{T - T_1}{2 \dfrac{c^2}{k} \overline{h} \dfrac{\pi r_1}{A} (T_1 - T_b)} \tag{7}$$

where $\overline{h}$ is the average heat transfer coefficient and A is the cross-sectional area. Since the inner surface temperature is uniform in the circumferential direction, we may write

$$T_1 - T_b = (T_1 - T)_b = \frac{2}{A} \int\int (T_1 - T) dA \tag{8}$$

where the integration is to be performed over half the area owing to symmetry. When the average Nusselt number is defined in terms of the hydraulic diameter by the expression

$$\overline{Nu} = \frac{\overline{h}}{k} \frac{4\pi (r_2^2 - r_1^2)}{2\pi (r_2 + r_1)} \tag{9}$$

and Equations (8) and (9) are substituted into (7) one obtains

$$\frac{1}{\overline{Nu}} = -\frac{2 c^2 r_1 \int\int \sigma\, dA}{\pi (r_2 - r_1)^3 (r_2 + r_1)^2} \tag{10}$$

Since the solution for σ is in terms of (ξ, η) variables, the element of area $dA = dx\, dy$ must be expressed in terms of (ξ, η) variables. With the transformation

$$dA = dx\, dy = J(\xi, \eta)\, d\xi\, d\eta \tag{11}$$

where

$$J(\xi, \eta) = \begin{vmatrix} \dfrac{\partial x}{\partial \xi} & \dfrac{\partial x}{\partial \eta} \\ \dfrac{\partial y}{\partial \xi} & \dfrac{\partial y}{\partial \eta} \end{vmatrix}$$

and Equations (2f) and (2g) the expression for dA becomes

$$dA = \frac{c^2\, d\xi\, d\eta}{(\cosh\eta - \cos\xi)^2} \tag{12}$$

Substituting Equation (12) into Equation (10) gives

$$\frac{1}{\overline{Nu}} = \frac{2(\sinh\alpha)^4}{\pi \left(\dfrac{r_2}{r_1} - 1\right)^3 \left(\dfrac{r_2}{r_1} + 1\right)^2} \int_{\alpha}^{\beta} \int_{o}^{\pi} \frac{\sigma}{(\cosh\eta - \cos\xi)^2} d\xi\, d\eta \tag{13}$$

The double integration of Equation (13) was performed graphically, and the average Nusselt number as a function of eccentricity is shown in Figure 4 for $\frac{r_2}{r_1} = 1.94$. This value was chosen to correspond to the

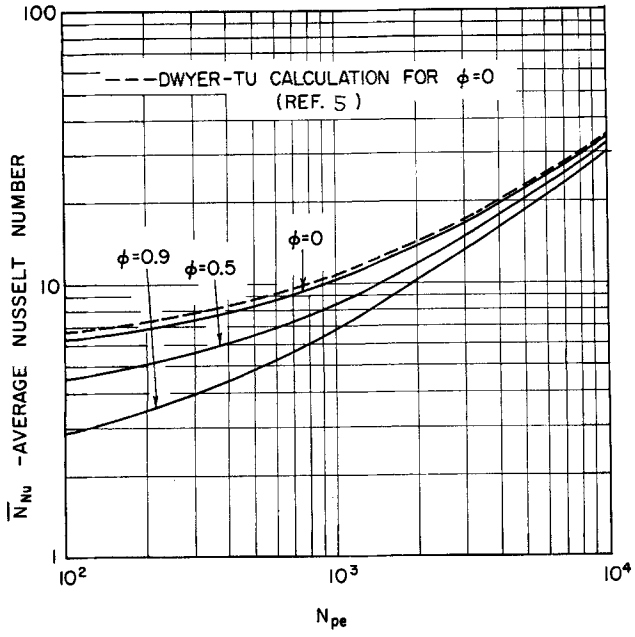

Fig. 5. Average Nusselt number calculated from Equation (16).

annulus model in a tube array with a pitch-to-diameter ratio of 1.375. For the limiting case of concentric annuli, the equation for the average Nusselt number may be written (*11*)

$$\frac{1}{\overline{Nu}} = \frac{\frac{3}{8}\left(\frac{r_2}{r_1}\right)^4 + \frac{1}{8} - \frac{1}{2}\left(\frac{r_2}{r_1}\right)^2 - \frac{1}{2}\left(\frac{r_2}{r_1}\right)^4 \ln\frac{r_2}{r_1}}{\left[\left(\frac{r_2}{r_1}\right)^2 - 1\right]\left[\frac{r_2}{r_1} - 1\right]\left[1 - \left(\frac{r_2}{r_1}\right)^2\right]} \tag{14}$$

It is clear from Figure 4 that a considerable reduction in average Nusselt number occurs at high eccentricity.

APPLICATION TO LIQUID METAL HEAT TRANSFER

The expression suggested by Lyon (*12*), Hartnett and Irvine (*6*) and others for estimating the turbulent Nusselt number for liquid metals is

$$Nu = c_1\, Nu)_s + c_2\, (Pe)^{0.8} \tag{15}$$

where C_1 and C_2 are constants and $Nu)_s$ is the slug Nusselt number. Hartnett and Irvine (*6*) suggested the values $C_1 = 0.667$ and $C_2 = 0.025$ to provide the closest agreement between Equation (15) and experimental tube data. For lack of a better assumption, the same values will be assumed applicable in the present analysis so that the equation

$$Nu = 0.667\, Nu)_s + 0.025\, (Pe)^{0.8} \tag{16}$$

is to be used for the prediction of turbulent Nusselt numbers for liquid metals.

Values of Nu from Equation (16) are shown in Figure 5 for various values of eccentricity including zero eccentricity. Shown also is the curve of Nu vs. Pe from the analysis of Dwyer and Tu (*5*) for the concentric annulus. For zero eccentricity, the value of Nu given by Equation (16) differs from the Dwyer-Tu value by less than 1% at $Pe = 100$ and by 8% at $Pe = 10{,}000$. For small values of Pe, the effect of eccentricity in reducing the average Nusselt number is very pronounced. For example, at $Pe = 100$, the value of Nu for an eccentricity of 0.9 is reduced by a factor of 2.3 below the value for the concentric case.

ACKNOWLEDGMENT

The author wishes to express his appreciation to Dr. O. E. Dwyer for suggesting the problem considered in this investigation. The invaluable assistance of Mr. Gary Peterson in performing the calculations is also acknowledged.

NOTATION

A = flow area = $\pi(r_2^2 - r_1^2)$
A_n, B_n, E, F = constants defined by Equations (2)
c = length defined by Equations (2*h*)
C_p = heat capacity at constant pressure
e = eccentricity = $(r_2 - r_1)$
h = heat transfer coefficient
k = thermal conductivity
Nu = Nusselt number defined by Equation (9)
Pe = Peclet number
q = heat flux
Q = total heat transfer per unit length of inner cylinder
r_1, r_2 = inner and outer radii, respectively
T = temperature
T_1 = inner surface temperature
T_b = bulk temperature defined by Equation (8)
U = slug flow velocity
x, y, z = space coordinates defined in Figure 1

Greek Letters

α, β = constants defined by Equations (2*i*) and (2*j*)
γ = radius ratio = r_1/r_2
η, ξ = curvilinear coordinates defined by Equations (2*f*) and (2*g*)
ρ = fluid density
σ = dimensionless temperature difference defined by Equation (2*a*)
ϕ = eccentricity ratio = $e/(r_2 - r_1)$

Subscripts

1 = inner surface
— = outer surface
0 = average

LITERATURE CITED

1. Friedland, A. J., O. E. Dwyer, M. W. Maresca, and C. F. Bonilla, "Heat Transfer to Mercury in Parallel Flow Through Bundles of Circular Rods," *International Heat Transfer Conference*, Part III, p. 526, Boulder, Colorado (1961).
2. Sparrow, E. M., and A. L. Loeffler, Jr., *A.I.Ch.E. Journal*, **5**, No. 3, p. 325 (1959).
3. ———, *J. Heat Transfer*, **83**, No. 4, p. 415 (1961).
4. Deissler, R. G., and M. F. Taylor, "Analysis of Axial Turbulent Flow and Heat Transfer Through Banks of Rods or Tubes," Reactor Heat Transfer Conference (1956).
5. Dwyer, O. E., and P. S. Tu, *Chem. Eng. Progr.*, **56**, No. 30, p. 183 (1960).
6. Hartnett, James, and T. F. Irvine, *A.I.Ch.E. Journal* **3**, No. 3, p. 313 (1957).
7. Rohsenhow, W. M., and H. Y. Choi, "Heat, Mass and Momentum Transfer," p. 139, Prentice-Hall, Englewood, New Jersey (1961).
8. Bateman, Harry, "Partial Differential Equations of Mathematical Physics," p. 260, Dover Publications, New York (1944).
9. Jeffrey, G. B., *Phil. Trans. Roy. Soc., London*, **221**, 265 (1921).
10. El-Saden, M. R., *J. Heat Transfer*, **83**, No. 4, p. 510 (1961).
11. Knudsen, J. G., and D. L. Katz, "Fluid Dynamics and Heat Transfer," p. 382, McGraw-Hill, New York (1958).
12. Lyon, R. N., Oak Ridge National Laboratory *Report 361* (1949).

Manuscript received September 20, 1962; revision received January 17, 1963; paper accepted January 17, 1963.